CASING PROFILE

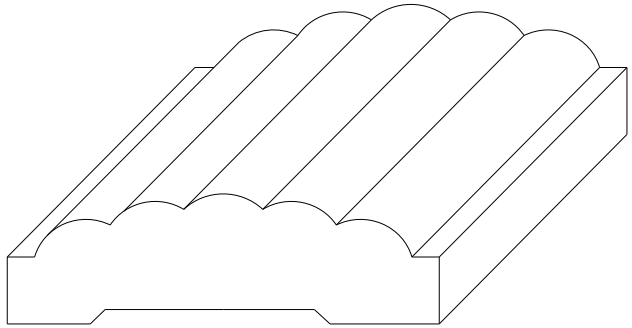

Category:	Profile #:	Dimensions:	Specie:	Revised:
CASING	HHH 2660	11/16” x 2 1/4”		

Customer:	Approval Signature:	Notes: